Using Artificial Neural Network in Study Stability of Power System in Muharda Plant (Hama-Syria)

Ahmad Alzakkar
Institute of Electrical Engineering
Kazan State Power Engineering University
Kazan, Russia
Ahmadalzakkar86@gmail.com

Fouad Alhajj Hassan
Institute of Electrical Engineering
Kazan State Power Engineering University
Kazan, Russia
Fouadhajjhassan42@gmail.com

Nikolay Mestnikov
Institute of Electrical Engineering
Kazan State Power Engineering University
Kazan, Russia
Sakhacase@bk.ru

Abstract*— The management of power system has become more difficult than earlier because power systems are operated closer to security limits, environmental constraints restrict the expansion of transmission network, the need for long distance power transfers has increased and fewer operators are engaged in the supervision and operation of power systems. Voltage instability has become a major concern in many power systems and many blackouts have been reported, where the reason has been voltage instability. In the present work, the electric voltage stability in Muharda station in Syria has studied during the normal and up normal loading state. The results in this study were getting from artificial neural network, which is consisting from three layers (input-hidden-output), where this network characterized by the speed and accuracy in processing before the failure and turn off the supplying which may lead to economical problems. This study has been done through two different patterns of generating in this station (single - double) generators. The achievement of this network consists of two stages: training Stage (off-line) and testing Stage (on-line) to make a comparison between the training stage and testing stage which leading to optimization the load in testing cases depending on training data.

Keywords*— Muharda station, artificial neural network (ANN), collapse, generator, stability.

I. INTRODUCTION

The stability of an electric power system is a term in electrical power engineering that represents the ability of the system to return to the normal state of operation (at the default voltage and frequency) after a disturbance [1],[2],[3]. Several methods are used for that purpose like equal area criterion [4] and transient stability margin (TSM)[5]. The protection of individual systems is relatively simple when the directional voltage protection is used. Increased size of the networks and complicated connection of these networks drives the need to create an artificial neural network [6], which is used for analyzing the system feedback and processing in relatively short time in comparison with the other methods to avoid the voltage collapse [7],[8] in the electrical system.

II. CONSTRUCTION OF THE NEURAL NETWORK:

A neuron is an information-processing unit that is fundamental to the operation of a neural network. Fig.1 shows the model of a neuron, which forms the basis for designing a large family of neural. Here, we identify three basic elements of the neural model [9],[10]:

1. A set of synapses, or connecting links, each of which is characterized by a weight or strength of its own. Specifically, a signal **xj** at the input of synapse **j** connected to neuron k is multiplied by the synaptic weight **wkj**. It is important to make a note of the manner in which the subscripts of the synaptic weight **wkj** are written. The first subscript in **wkj** refers to the neuron in question, and the second subscript refers to the input end of the synapse to which the weight refers. Unlike the weight of a synapse in the brain, the synaptic weight of an artificial neuron may lie in a range that includes negative as well as positive values.

2. An adder for summing the input signals, weighted by the respective synaptic strengths of the neuron; the operations described here constitutes a linear combiner.

3. An activation function for limiting the amplitude of the output of a neuron. The activation function is also referred to as a squashing function, in that it squashes (Limits) the permissible amplitude range of the output signal to some finite value.

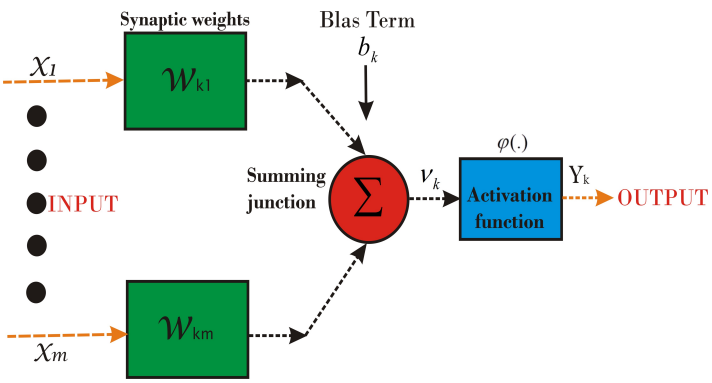

Fig.1. The structure of neuron cell (Non linear Model)[9].

The neural model above also includes an externally applied bias, denoted by **bk**. The bias **bk** has the effect of increasing or lowering the net input of the activation function, depending on whether it is positive or negative, respectively. In mathematical terms, we may describe the neuron **k** depicted in fig.1 above by writing the pair of equations [11]:

$$u_k = \sum_{j=1}^{m} w_{kj} . X_j \qquad (1)$$

$$Y_k = \varphi.(u_k + b_k) \qquad (2)$$

Where:

$(x_1, x_2, ..., x_m)$:are the input signals;

$(w_{k1}, w_{k2}, ..., w_{kj})$:are the respective synaptic weights of neuron k;

(u_k) **:**(not shown in fig.1 above) is the linear combiner output due to the input signals; bk is the bias;

$\varphi(.)$:is the activation function;

(Y_k) :is the output signal of the neuron.

The use of bias bk has the effect of applying an affine transformation to the output **uk** of the linear combiner in the model of neuron, as shown by

$$v_k = u_k + b_k \qquad (3)$$

The artificial neural network consists of three layers [12],[13],[14] as shown in fig.2:

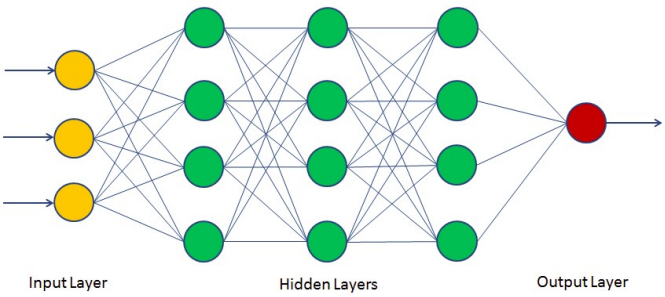

Fig.2. The structure of artificial neural networks(ANN)[12].

1-Input layer: This is an important part where the voltage stability assessment requires accurate data in the training stage to the input layer. According to that information, the critical situations in the electrical system can be processed.

2-Hidden layer: The number of neurons in the hidden layer ranges from 3 to 12 because the values are nonlinear.

3-Output layer: The output layer in this situation consists of a single neuron. The aim of this layer is to predict the value of the maximum load depending on the data obtained from the training stage.

The architecture of a feed-forward neural network is shown in fig.3. The ANN consists of successive layers including an input layer, hidden layers and an output layer of neurons. A circle represents a neuron. The line between two neurons represents the weight relationships. The connections only run from every neuron in one layer to every neuron in the next layer, but with no other connections permitted. The activation function is applied on each neuron of hidden layers. The output layer is compared to a target and the derivatives of the error is applied in a backpropagation process to adjust the weights[11].

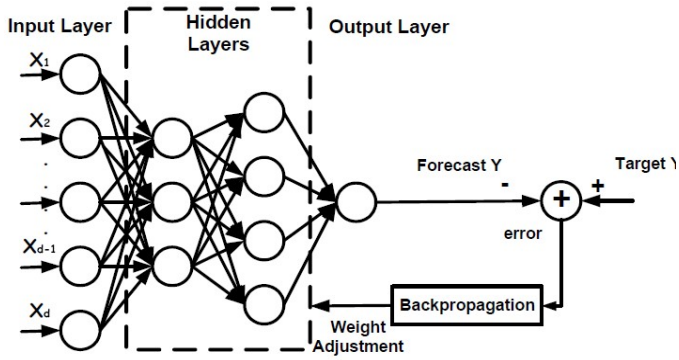

Fig.3. Multilayer Perceptron (MLP) Network structure and learning process[11].

III. THE IMPLEMENTATION OF NEURAL NETWORK :

- **The training stage (off-line):**

In the present work, the neural network was trained using Back Propagation Algorithm (BPA) [15],[16],[17] as training algorithm, which is one of the best algorithms used for the statistically cases studying (off-line). This network has been applied to a test system for Muharda station in Syria, which has four turbines where each of them has the nominal capacity of approximately 150 MW. Two cases are studied in this work shown in table(I).

TABLE I. THE INPUT DATA OF THE NEURONAL NETWORK(FROM MUHARDA STATION)

Input Vectors	G1	G1+G2
Generated power P_G (MW)	110	225
Maximum reactive power Q_{max} (Mvar)	25	47
Reactive power reserve R_Q (Mvar)	13	20
Voltage V (kV)	230	230
Total demand from reactive power Q_T (Mvar)	20	45
Real power losses P_{Loss} (MW)	2	4
Reactive power losses Q_{Loss} (Mvar)	1	3
P_{Load} (MW)	100	190

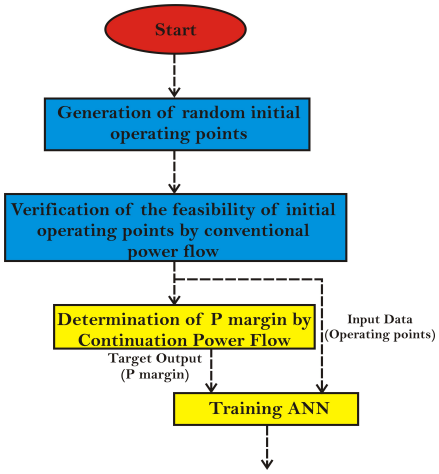

Fig.4.ANN training process flow chart [18],[19].

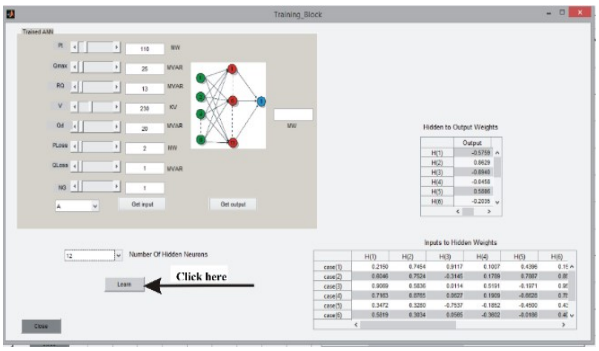

Fig.5.The program interface by using Matlab-GUI software(training stage).

It's clear that fig.5contains two tables[20],[21]; the first table(II) represents the change rate of neural weights during the motion from the input layer to the hidden layer. The neural weights represent the unit on which the network depended in loading comparison process. The second table (III) represents the rate of change of neural weights during the motion from the hidden layer to output layer. By clicking on the learn icon, the neural network begins the training process according to the input data. After training of the neural network, these values are taken from the system and are inserted in the following tables.

TABLE II. THE CHANGE RATE OF NEURAL WEIGHTS DURING THE MOTION FROM THE INPUT TO THE HIDDEN LAYER

Cases	H(1)	H(2)	H(3)	H(4)	H(5)	H(6)
1	-0.37	0.257	0.028	-0.18	0.140	0.545
2	0.995	-0.29	0.942	-0.31	0.768	-0.09
3	0.361	-0.92	0.700	0.849	0.584	-0.94
4	-0.13	0.473	-0.46	-0.62	0.799	0.435
5	0.781	-0.77	-0.90	0.117	0.561	-0.39
6	-0.86	-0.04	-0.84	0.018	-0.02	0.918
7	0.843	0.403	0.230	-0.31	0.857	-0.74
8	-0.36	0.125	0.961	0.099	-0.32	0.231

Cases	H(7)	H(8)	H(9)	H(10)	H(11)	H(12)
1	0.243	0.058	0.222	-0.05	-0.76	0.355
2	-0.17	-0.56	-0.74	-0.38	0.456	0.560
3	-0.29	0.435	0.423	-0.50	-0.51	0.399
4	0.700	-0.68	-0.76	-0.63	-0.19	-0.429
5	-0.66	-0.31	-0.59	0.043	0.791	0.280
6	0.491	0.049	0.692	-0.59	-0.35	1.001
7	0.478	0.282	0.678	-0.22	0.517	0.651
8	-0.29	0.521	-0.18	-0.02	0.373	0.963

TABLE III.THE RATE OF CHANGE OF NEURAL WEIGHTS DURING THE MOTION FROM THE HIDDEN LAYER TO OUTPUT LAYER.

Results	H(1)	H(2)	H(3)	H(4)	H(5)	H(6)
	0.205	-0.57	-0.82	-0.24	0.170	0.549
Results	H(7)	H(8)	H(9)	H(10)	H(11)	H(12)
	0.480	-0.06	-0.49	0.441	1.761	-0.714

- **The testing stage (on-line):**

The network will be tested in a method (0-1) where:

-Value(0): indicates normal loading and thus stability of the voltage.

-Value(1): indicates overload and thus instability of the voltage.

Returning to the previously trained network (Muharda station) and enter it at the following test interface fig.6 after we set the measured values as inputs:

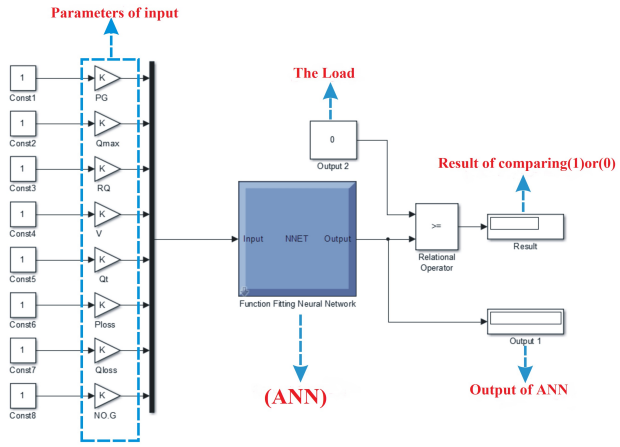

Fig.6. The program interface that was designed using MATLAB-SIMULINK software(testing stage).

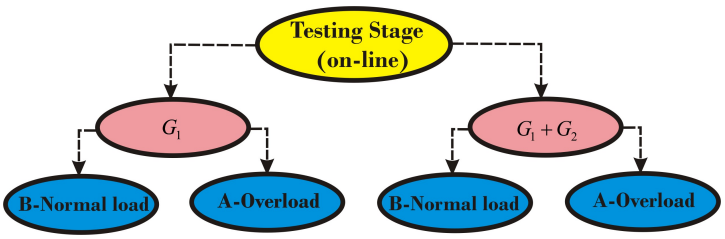

Fig.7. The algorithm of implementation of the testing stage.

Testing in case of a single generator (G1): In this case a single generator feeds the total load of the network; and the highest load in that case was 100 MW.

A-Overload situation:

From fig.8 the value for the first loading state **(115 MW)** is entered to show:

-The value **(100.0255 MW)** is which is the output of the neural network.

-The value **(1)** indicates the overload of the system.

As a result: (collapse of voltage -black out state - the power system will be unstable).

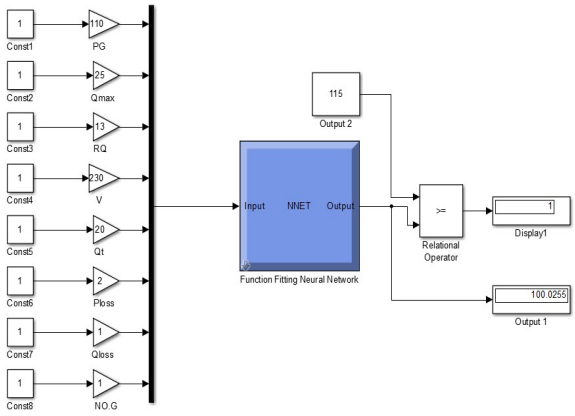

Fig.8.The testing stage (Overload situation- Single generator).

B-Normal load situation:

From fig.9 the value for the second loading state **(85 MW)** is entered to show:

-The value **(100.0255 MW)** is which is the output of the neural network.

-The value **(0)** indicates the normal load of the system.

As a result: (the power system will be stable).

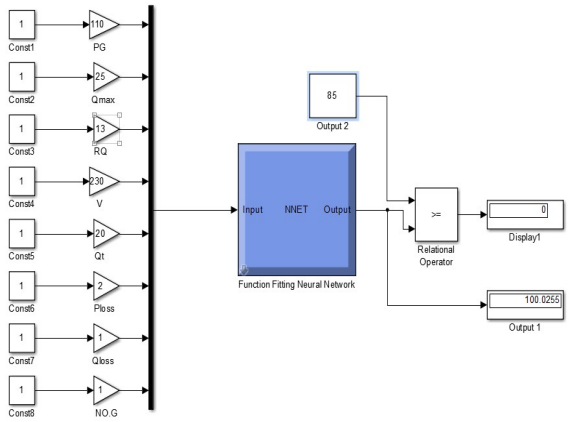

Fig.9. The testing stage (Normal load situation- Single generator).

Testing in case of double generators (G1+G2): When the first and the second generators work together to feed the total load of the network, the greatest load is achieved (190 MW).

A-Overload situation:

From fig.10. the value for the third loading state **(205 MW)** is entered to show:

-The value **(190.0176 MW)** is which is the output of the neural network.

-The value **(1)** indicates the overload of the system.

As a result: (collapse of voltage -black out state - the power system will be unstable).

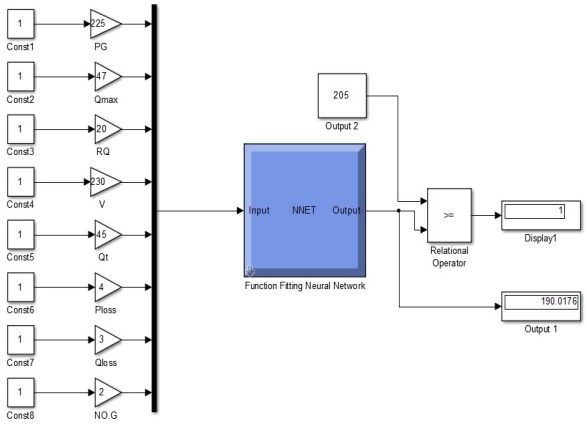

Fig.10. The testing stage (Overload situation- Double generators).

B-Normal load situation:

From fig.11 the value for the fourth loading state **(175 MW)** is entered to show:

-The value **(190.0176 MW)** is which is the output of the neural network.

-The value **(0)** indicates the normal load of the system.

As a result: (the power system will be stable).

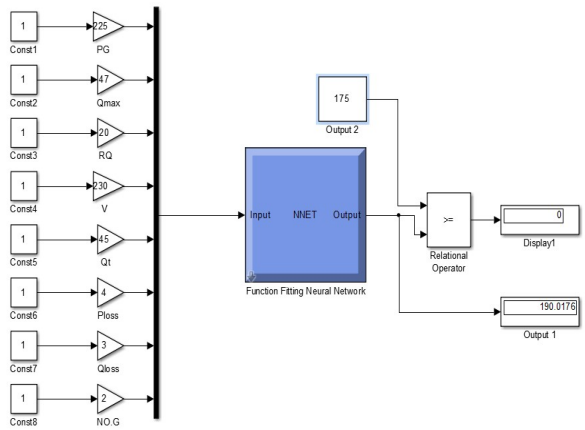

Fig.11. The testing stage (Normal load situation- Double generators).

IV. RESULTS

TABLE IV. COMPARING THE RESULTS IN (TABLE I) WITH THE RESULTS OBTAINED FROM ANN

Results	Generation Direction	
	Single generator (G1)	Double generators (G1+G2)
Target	100	190
Output	100.0255	190.0176

It is clear from table IV the great convergence between the maximum values given by the electrical power system and the values predicted by ANN, which are illustrated graphically by fig.12.

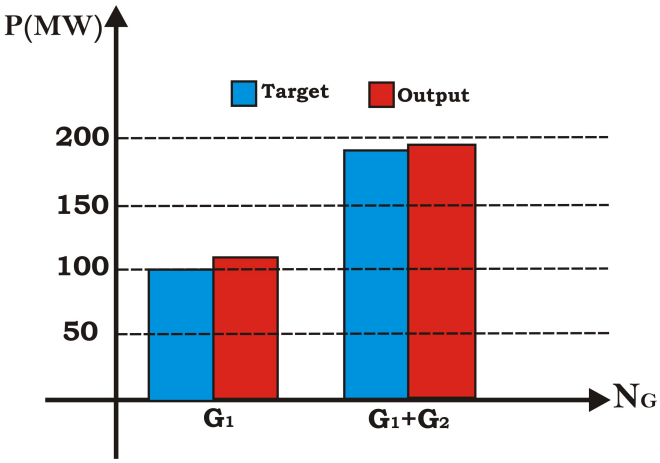

Fig.12. Comparison of the values given by the electrical grid to the values predicted by the neural network.

V. CONCLUSION

- Fig.12 shows the controlling ability of the neural network on the output of the system depending on the accurate information about the system on which the network must be trained.
- It was found that when training the neural network, a very close and accurate information about the studied system is needed.
- The response and processing time are rather shorter than that in case of using the other (traditional) methods for network stability controlling.

VI. ACKNOWLEDGMENT

We thank the management of Kazan state power engineering university for their support to do this work. I thank Prof. Valeev.I.M and Assoc. Prof. Maksimov.V.V for their genuine support to complete this article successfully.

REFERENCES

[1] P.Kundur, "Power System Stability and Control," Electric Power Research Institute, USA, 1176p, 1993.

[2] H.Shi and X.Zhou, "Stability Analysis on Power System with Large Power Source," Scientific Research, 2013.

[3] P.Kundur, J.Paserba and G.Andersson, "Definition and Classification of Power System Stability," IEEE Transactions on power systems, 2004.

[4] S.Paudyal, G.Krishna and S.Sachdev, "Application of Equal Area Criterion Conditions in the Time Domain for Out-of-Step Protection," IEEE Transactions on power systems, 2010.

[5] H.El-Khazraji, "Assessment of Power System Transient Stability by (TSM) Method," Iraqi academic scientific journals, 2011.

[6] C.Gallo, "Artificial Neural Network: tutorial," www.researchgate.net, 189p, 2017.

[7] M.Sachdev, H.Shuh, P.Solanics and J.Williams, " Voltage Collapse Mitigation," Report to IEEE Power System Relaying Committee, 36p, 1996.

[8] I.Samuel, A.Cladius Ojo, J.Katende and A.Awelewa, "Prediction of Voltage Collapse in Electrical Power System Networks using a New Voltage Stability Index," International Journal of Applied Engineering Research, 2017.

[9] S.Ammavajjula, M.Kambala and D.Kasimahanthi, "An Introduction to Artificial Neural Networks," IEEE Transactions on power systems, 2018.

[10] E.Petriu, "Neural Networks: Basics," University of Ottawa, 42p, 2017.

[11] Q.Zhou, "Online Voltage Stability Prediction and ControlUsing Computational Intelligence Technique," The University of Manitoba, Canada, 2010.

[12] A.Momoh and E.El-Hawary, "Electric Systems Dynamics & Stability with Artificial Intelligence Applications," Dalhousie University Halifax, 356p, 2000.

[13] B.Waziri, K.Bala and S.Bustani, "Artificial Neural Networks in Construction Engineering and Management," International Journal of Architecture, 2017.

[14] A.Alzakkar, I.Valeev and N.Mestnikov, "The Artificial Power System Networks Stability Control Using the Technology of Neural Network," E3S Web of Conferences 124, 2019.

[15] Ajoy.Palit and G.Doeding, "Backpropagation Based Training Algorithm for Takagi - Sugeno Type MIMO Neuro-Fuzzy Network to Forecast Electrical Load Time Series," IEEE Transactions on power systems, 2002.

[16] M.Alsmadi, S.Azman and K.Omar, "Back Propagation Algorithm: The Best Algorithm Among the Multi-layer Perceptron Algorithm," https://www.researchgate.net, 2009.

[17] M.Cilimkovic, "Neural Networks and Back Propagation Algorithm," Institute of Technology Blanchardstown, 2010.

[18] A.Jun and M.Gang, Professor, "Power system transient stability margin assessment using steady-state information," IEEE PES Innovative Smart Grid Technologies Asia, 2019.

[19] F.Alhajj Hassan and A.Sidorov, "Study of power system stability: Matlab program processing data from Zahrani power plant (Beirut, Lebanon) ," E3S Web of Conferences 124, 2019.

[20] R.Heikki and N.Koivo, "Neural Networks: Basics Using Matlab Neural Network Toolbox," , 59p, 2008.

[21] M.Beale and T.Hagan, "Neural Network Toolbox™ 7 User's Guide, University of California," https://www.researchgate.net, 951p, 2011.